Notes:
- Construction is 24 gauge galvanneal steel.
- When specified, insulation is 1/2" (13), 2-pound density matte finish fiberglass.
- Inlets are oval as standard. Round inlets are available upon request for an additional charge. Height of plenum with round inlet will be diameter plus 4" (102).
- Metric dimensions are shown in millimeters.
- Recommend Ceiling Opening:
  - Length - nominal size + 3/8"
  - Width - E + 1/2"

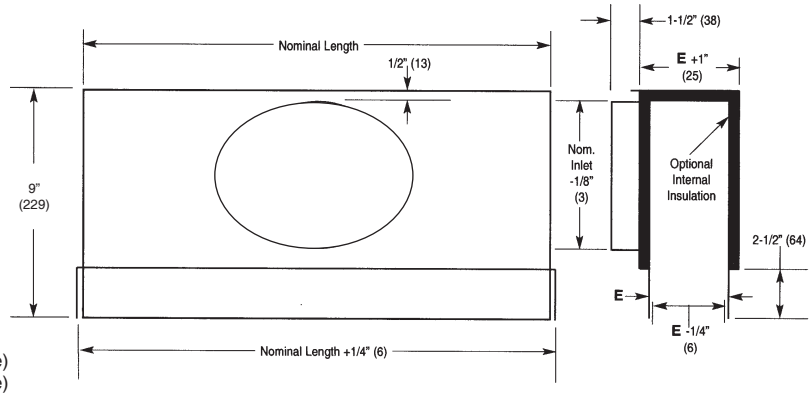

Model CXPC 4 (For use with 1/2" (13) Slot Channelaire)
Model CXPC 6 (For use with 3/4" (19) Slot Channelaire)
Model CXPC 8 (For use with 1" (25) Slot Channelaire)

INLET LOCATION — "E" DIMENSIONS							
04 (102)	05 (127)	06 (152)	07 (178)	08 (203)	09 (229)	10 (254)	12 (305)
2-1/4" (57)	2-3/4" (70)	3-1/4" (83)	3-3/4" (95)	4-1/4" (108)	4-3/4" (121)	5-1/4" (133)	6-1/4" (159)

Nominal Inlet Size	A	B	Listed Length of Plenum In Inches (Millimeters) "C" Dimension									
			23 (584)	24 (610)	35 (889)	36 (914)	47 (1194)	48 (1219)	59 (1499)	60 (1524)	71 (1803)	72 (1829)
04 (102) - 05 (127) 06 (152) - 07 (178) 08 (203)	12-1/4 (311)	7-1/4 (184)	22-7/8 (581)	23-7/8 (606)	34-7/8 (886)	35-7/8 (911)	46-7/8 (1191)	47-7/8 (1216)	58-7/8 (1495)	59-7/8 (1521)	70-7/8 (1800)	71-7/8 (1823)
09 (229) - 10 (254)	14-1/4 (362)	8-1/4 (210)										
12 (305)	16-1/4 (413)	9-1/4 (235)										

Model	No. of Slots of Channelaire "D" Dimensions Listed in Inches (Millimeters)							
	1	2	3	4	5	6	7	8
CXPC 4	1-3/8 (35)	2-11/16 (68)	4 (102)	5-5/16 (135)	6-5/8 (168)	7-15/16 (202)	9-1/4 (235)	10-9/16 (268)
CXPC 6	1-5/8 (41)	3-3/16 (81)	4-3/4 (121)	6-5/16 (160)	7-7/8 (200)	9-7/16 (240)	11 (279)	12-9/16 (319)
CXPC 8	2-1/8 (54)	4-3/16 (106)	6-1/4 (159)	8-5/16 (211)	10-3/4 (273)	12-7/16 (316)	14-1/2 (368)	16-9/16 (421)

▼ Model Numbering System - PLENUMS

OPTION: (Must be present in order shown, left justified)

1	2	3	4	5	6	7	8	9	10	11	12	13	14
C	X	P	C	4	2	4	0	0	6	2	N		

C - Linear Diffuser

X - Accessory

P - Channelaire Plenum

DESIGN SERIES

DIFFUSER SLOT WIDTH
- 4 - 1/2"
- 6 - 3/4"
- 8 - 1"

DIFFUSER LENGTH
- 23 - 23"
- 24 - 24"
- 35 - 35"
- 36 - 36"
- 47 - 47"
- 48 - 48"
- 59 - 59"
- 60 - 60"
- 71 - 71"
- 72 - 72"

FRACTIONAL SIZE
- 0 - 0"
- 1 - 1/8"
- 2 - 1/4"
- 3 - 3/8"
- 4 - 1/2"
- 5 - 5/8"
- 6 - 3/4"
- 7 - 7/8"

INLET SIZE
- 04 - 4"
- 05 - 5"
- 06 - 6"
- 07 - 7"
- 08 - 8"
- 09 - 9"
- 10 - 10"
- 12 - 12"
- 14 - 14"
- 16 - 16"

DIFFUSER SLOT QTY.
- 1 - 1
- 2 - 2
- 3 - 3
- 4 - 4
- 5 - 5
- 6 - 6
- 7 - 7
- 8 - 8

R - Insulated
N - Uninsulated

D - Volume Control Damper

MOUNTING FRAME SUPPORTS
- A - For Mounting Frames 1, 4 & 5 with 13/16" Border
- B - For Mounting Frames 1, 4 & 5 with 1-1/8" Border
- C - For Mounting Frames 2 & 3 with All Borders

"Donn" and "Fineline" are registered trademarks of USG, Inc.

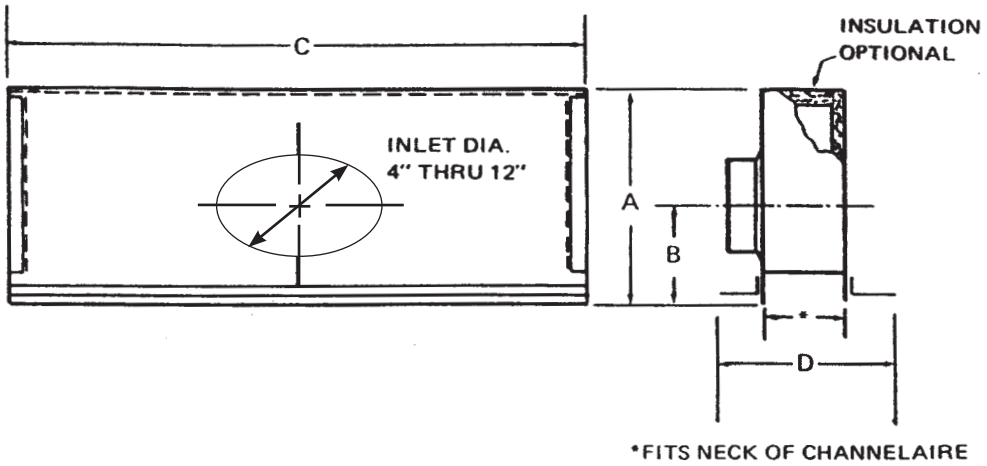

Nominal Inlet Size	A	B	Listed Length of Plenum "C" Dimension									
			23	24	35	36	47	48	59	60	71	72
04 - 05 06 - 07 08	9	7-1/4	22-3/4	23-3/4	34-3/4	35-3/4	46-3/4	47-3/4	58-3/4	59-3/4	70-3/4	71-3/4
09 - 10	9	8-1/4										
12	9	9-1/4										

"D" Dimension										
Option 14	Channelaire		Slot Quantity							
	Border	Slot	1	2	3	4	5	6	7	8
A	13/16	1/2	N/A	3-7/16	4-3/4	6-1/16	7-3/8	8-11/16	10	11-5/16
		3/4	N/A	3-15/16	5-1/2	7-1/16	8-5/8	10-3/16	11-3/4	13-15/16
		1	N/A	N/A	N/A	N/A	N/A	N/A	N/A	N/A
B	1-1/8	1/2	2-3/4	4-1/16	5-3/8	6-11/16	8	9-5/16	10-5/8	11-15/16
		3/4	3	4-9/16	6-1/8	7-11/16	9-1/4	10-13/16	12-3/8	13-15/16
		1	3-1/4	5-5/16	7-3/8	9-7/16	11-1/2	13-9/16	15-5/8	17-11/16

"D" Dimension										
Option 14	Channelaire		Slot Quantity							
	Border	Slot	1	2	3	4	5	6	7	8
C	13/16	1/2	N/A	3	4-5/16	5-5/8	6-15/16	8-1/4	9-9/16	10-7/8
		3/4	N/A	3-1/2	5-1/16	6-5/8	8-3/16	9-3/4	11-5/16	12-7/8
		1	N/A	N/A	N/A	N/A	N/A	N/A	N/A	N/A
C	1-1/8	1/2	N/A	3	4-5/16	5-5/8	6-15/16	8-1/4	9-9/16	10-7/8
		3/4	N/A	3-1/2	5-1/16	6-5/8	8-3/16	9-3/4	11-5/16	12-7/8
		1	N/A	4-1/2	6-9/16	8-5/8	10-11/16	12-3/4	14-13/16	16-7/8

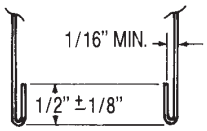

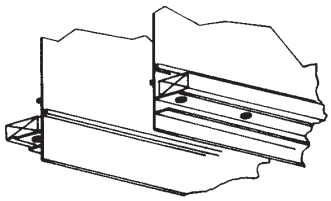

1. Hem duct as shown should be installed 3/4" above finished ceiling.
2. If mounting frame is used, fasten it to ceiling.
3. Place screws 'A' through slot 'B' and turn retaining washers 'C' on to screws until threads are completely extended above end bracket 'D'.
4. Engage two threads of each screw in mounting bracket 'E'.
5. Place diffuser section in duct opening and insert mounting brackets 'E' into duct hem.
6. Install joint splines 'F' to align butted sections.
7. Draw diffuser into place with screws.
8. Snap joint cover 'G' into slot under bracket 'D'.

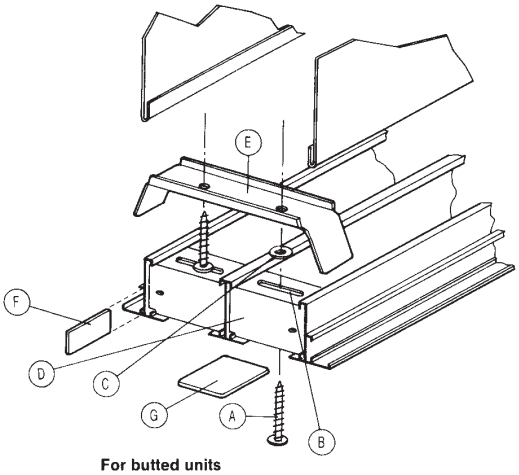

For butted units 1/32" space must be provided at joints to allow for thermal expansion

PLENUM

1. Plenums should be installed a minimum of 3/4" above the finished ceiling.
2. Plenums must be the same listed length as the diffuser section they are to be mounted on.
3. To attach the plenum, insert the screws through the end bracket in the outside slots of the Channelaire.
4. The screws will line up with pierced holes in the plenum ends.
5. Tighten screws until the diffuser is tight to the ceiling.

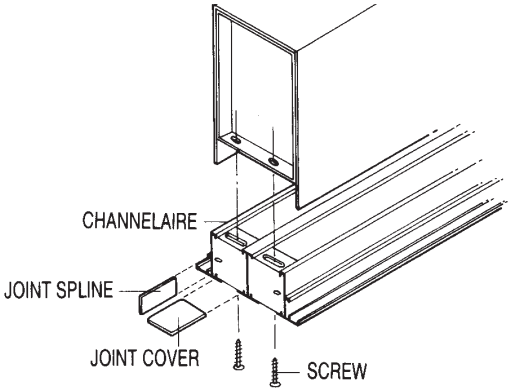

SUPPORT BRACKETS FOR SUSPENSION SYSTEM - OPTION "S"

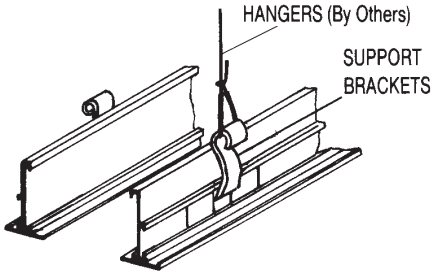

SUPPORT BRACKETS FOR T-BAR - OPTION "T"

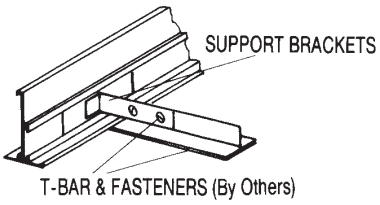

PATTERN ADJUSTMENT

BLANK OFF

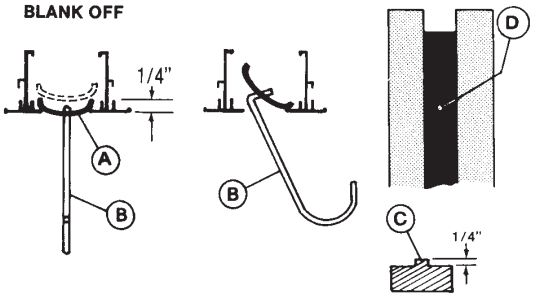

PARALLEL **PERPENDICULAR**

Parallel Discharge

1. Set pattern control 'A' in neutral attitude and position at 1/4" from face of diffuser. (This can be done by pulling to full closed with furnished hook 'B', and then using suggested template 'C', push pattern control into position at each adjustment hole 'D'.)
2. Insert tip of hook halfway into hole and rotate control in desired direction until one side of slot is completely closed. This position will result in an opening of 3/8" on which all catalog data is based.

Perpendicular Discharge

1. Same as for parallel discharge except position of pattern control is 3/8" from diffuser face.